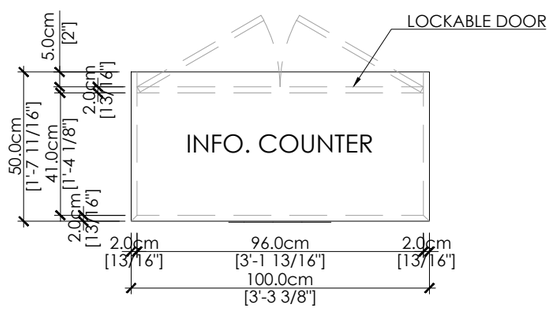

1 TOP VIEW — SCALE 1/20

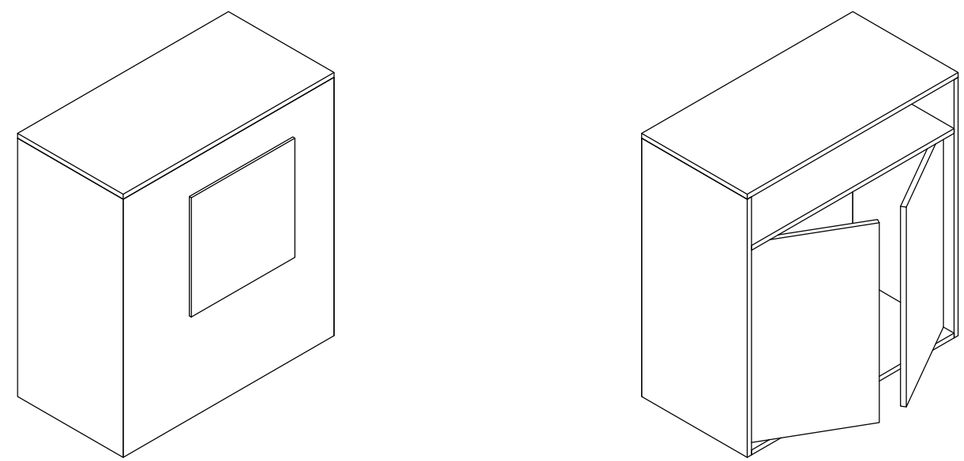

2 3D VIEWS — SCALE 1/20

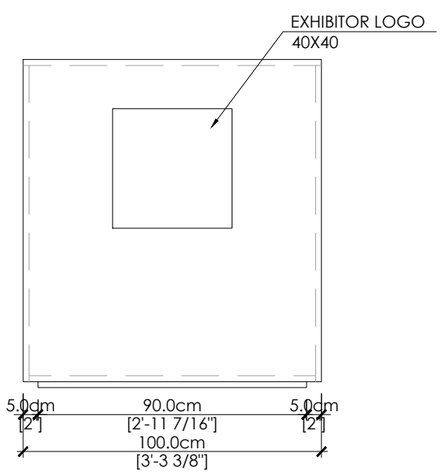

3 FRONT VIEW — SCALE 1/20

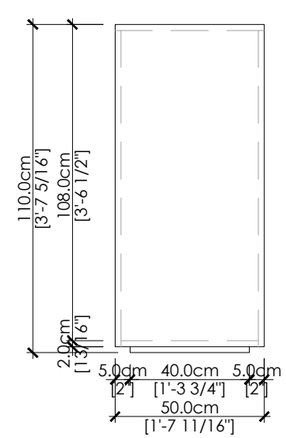

4 SIDE VIEW — SCALE 1/20

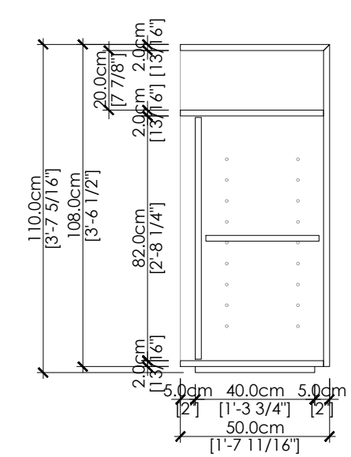

5 SECTION VIEW — SCALE 1/20

FB INTERNATIONAL, INC.

DEPARTMENT: GENERAL

PROJECT: FB INTERNATIONAL COUNTER

DRAWING TITLE: INFORMATION COUNTER CT-51

SCALE: (PRINT ON 11" X 17") 1/20

DRAWN BY: SL

CHECKED BY:

DRAWING NO.:

DRAWING DATE: Oct 02, 2018 2:12 PM

DATE REVISIONS:

NOTE:

Copyright © 1988-2014 FB International, Inc. All rights reserved